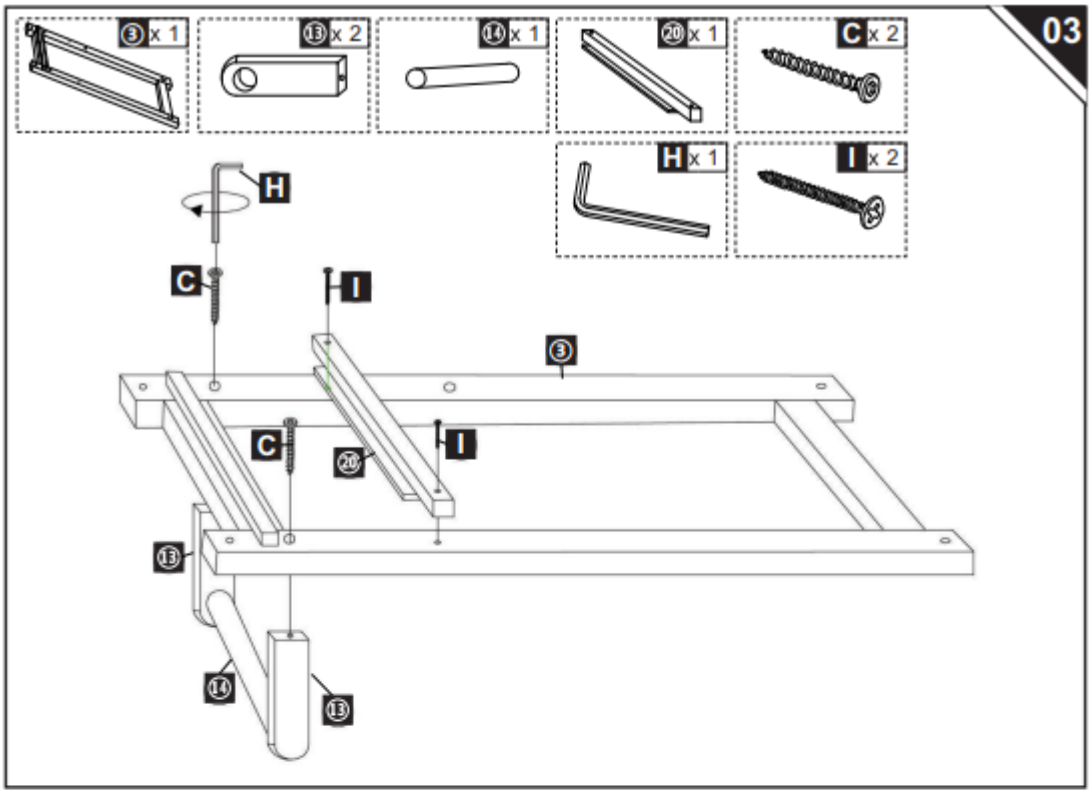
03
③ x 1
⑬ x 2
⑭ x 1
⑳ x 1
C x 2
H x 1
I x 2
H
C
I
③
C
⑳
I
⑬
⑭
⑬

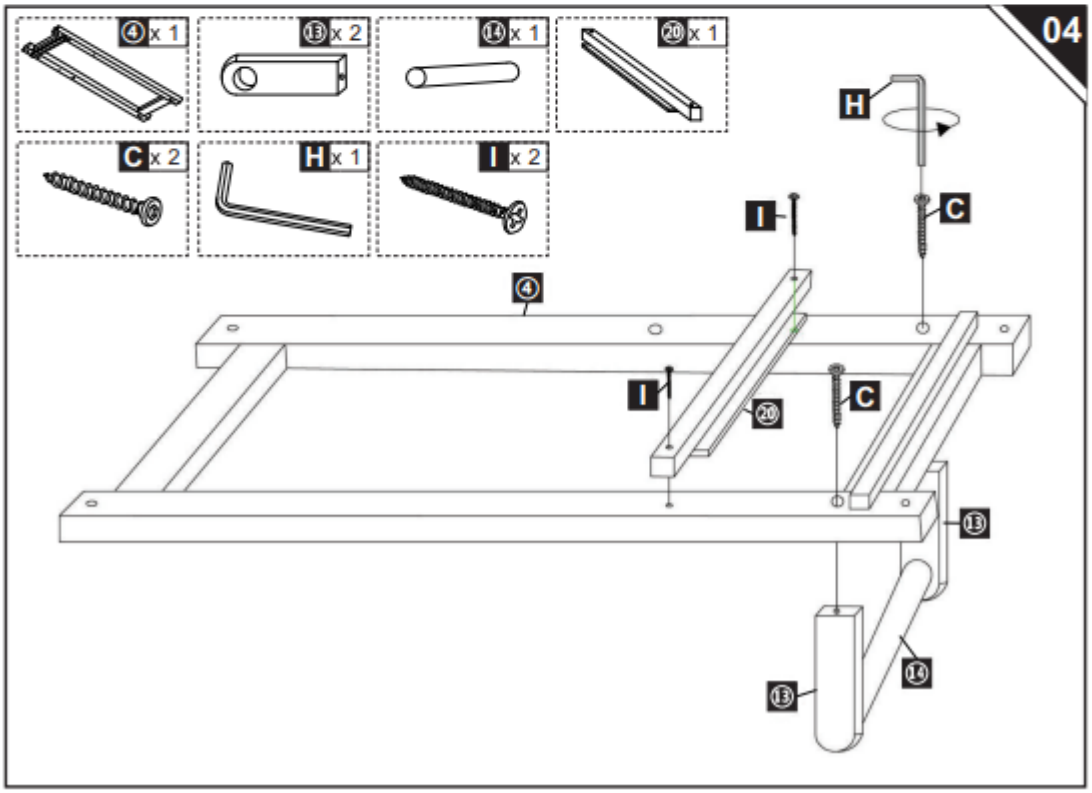
04
④ x 1
⑬ x 2
⑭ x 1
⑳ x 1
C x 2
H x 1
I x 2
H
I
C
④
I
⑳
C
⑬
⑭
⑬

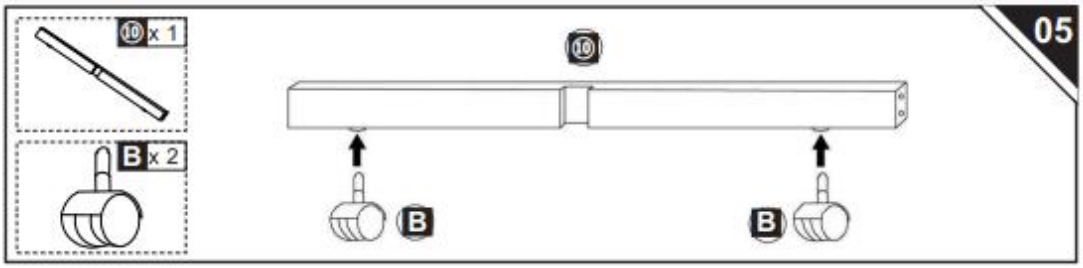
05
10 x 1
B x 2
10
B
B

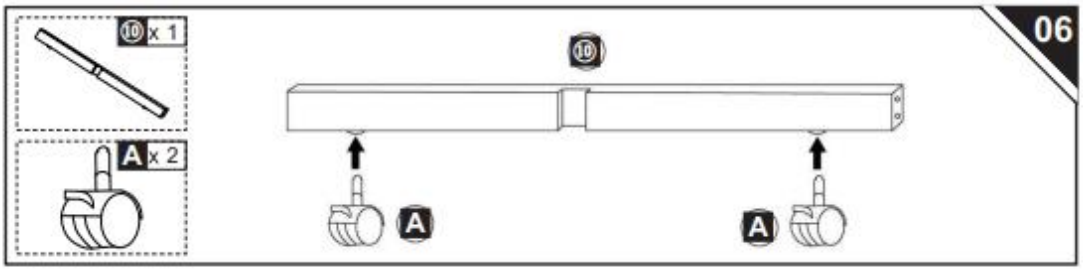
06
10 x 1
A x 2
10
A
A

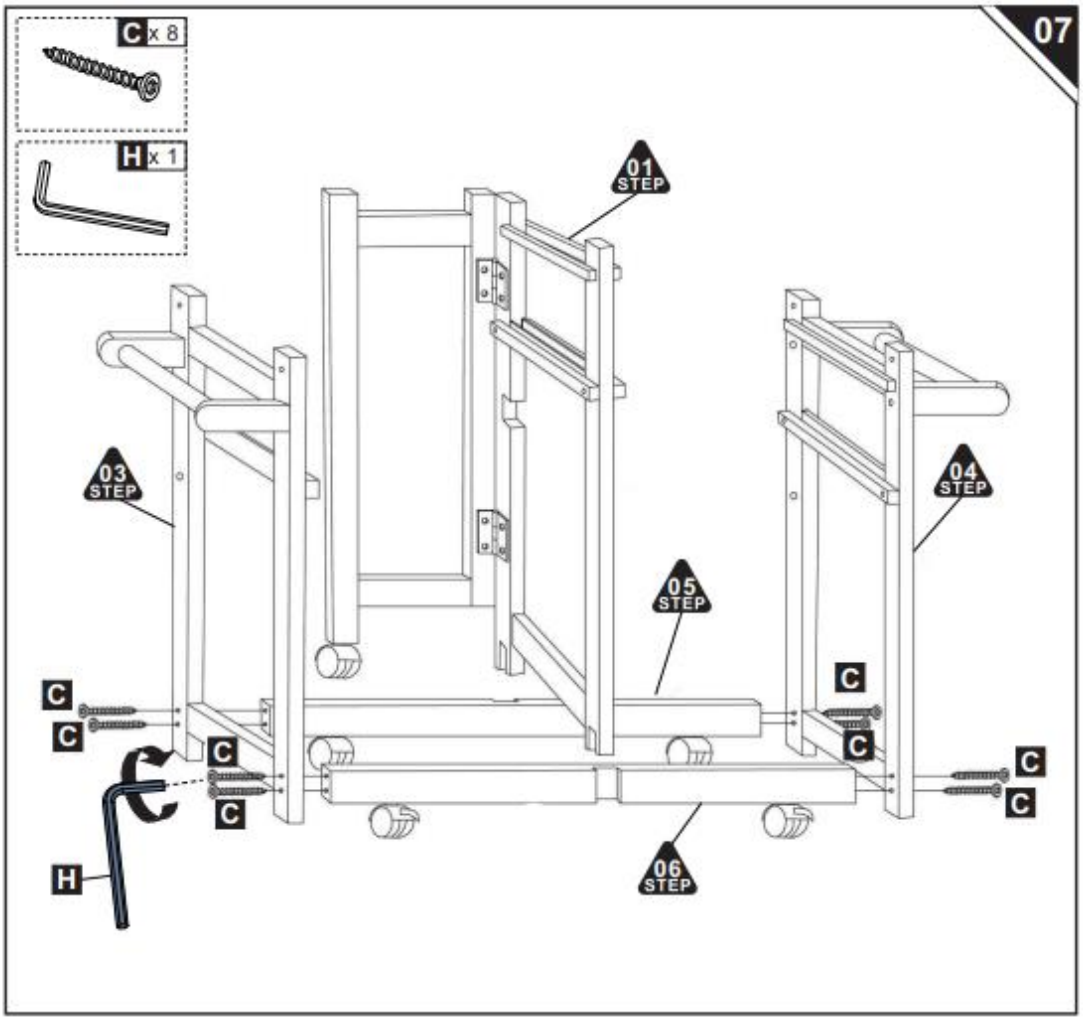
07
C x 8
H x 1
01 STEP
03 STEP
04 STEP
05 STEP
06 STEP
C
C
C
C
C
C
C
C
H

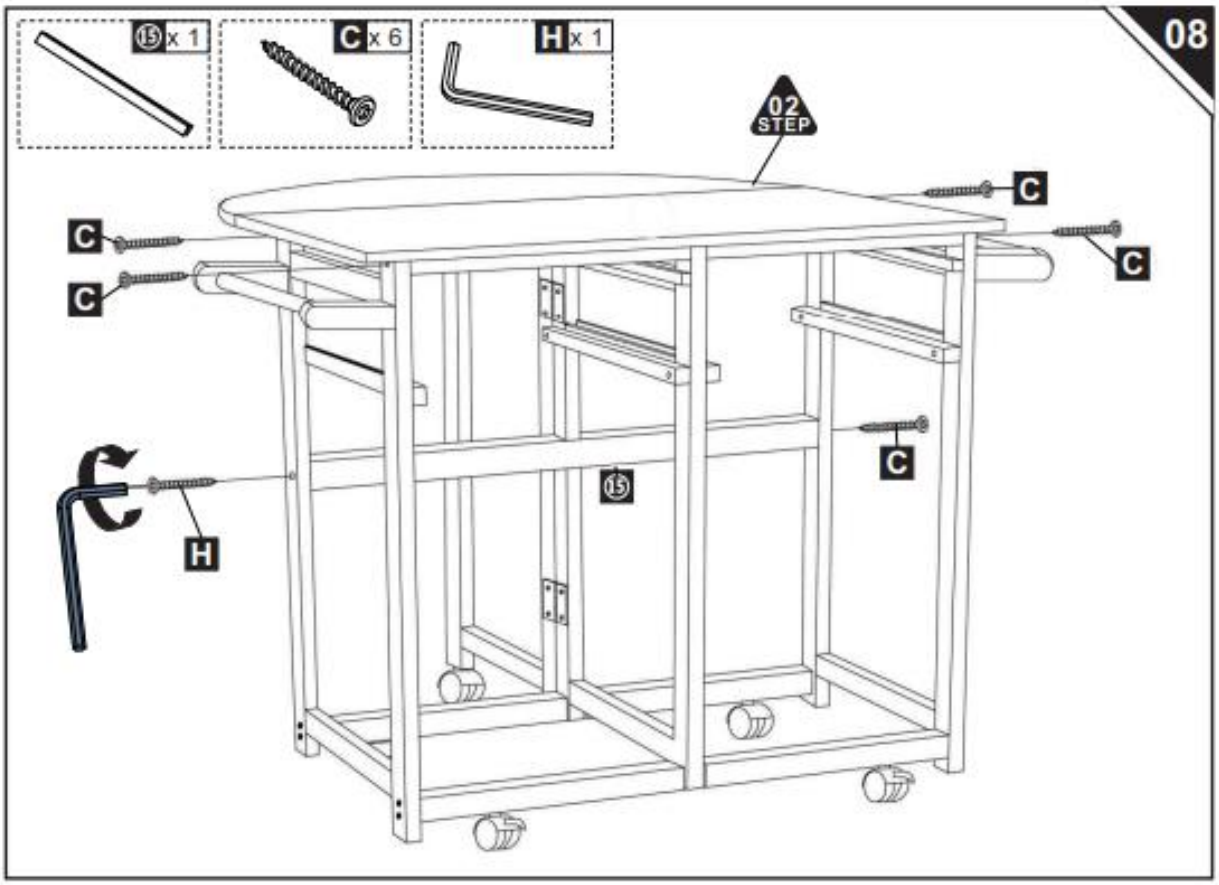
08
⑮ x 1
C x 6
H x 1
02 STEP
C
C
C
C
C
⑮
H

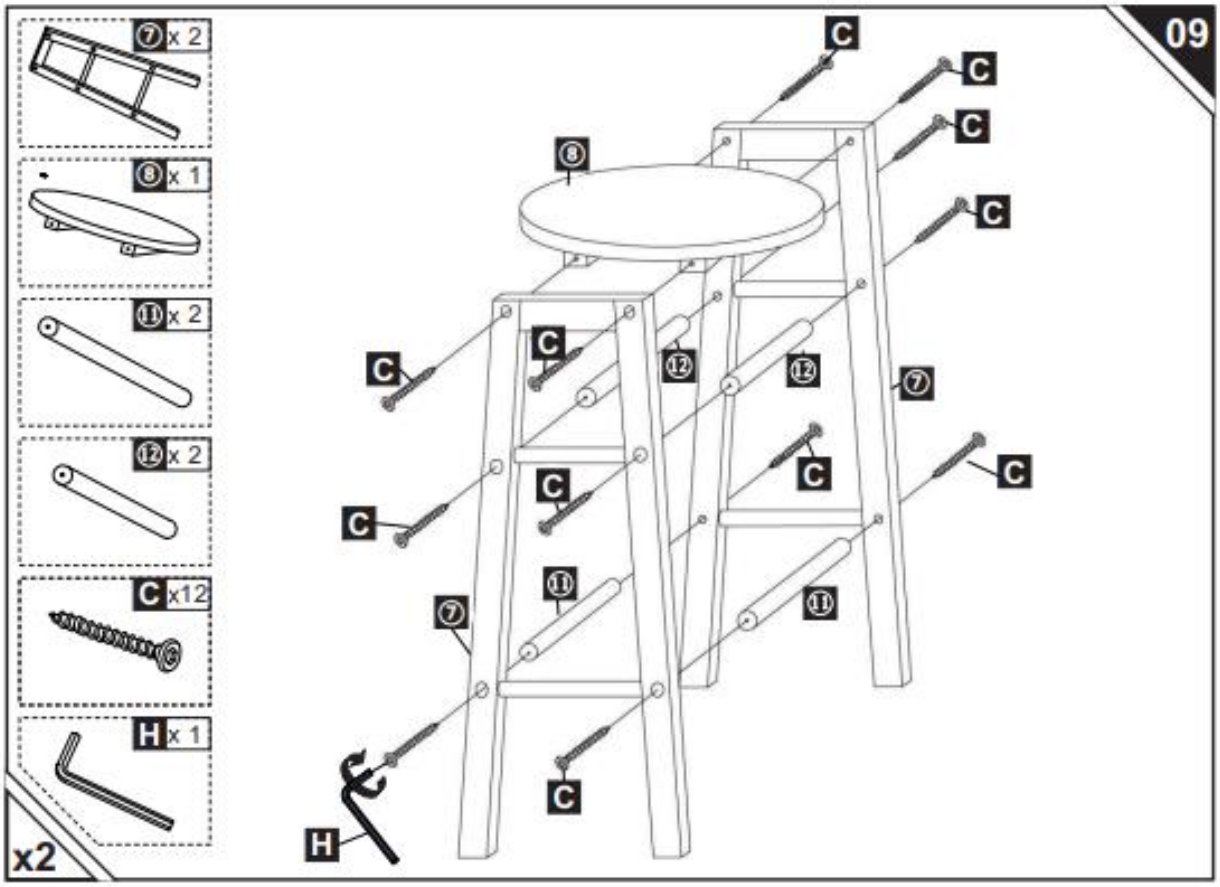
09
⑦ x 2
⑧ x 1
⑪ x 2
⑫ x 2
C x12
H x 1
x2
C
⑧
⑫
⑦
⑪
H

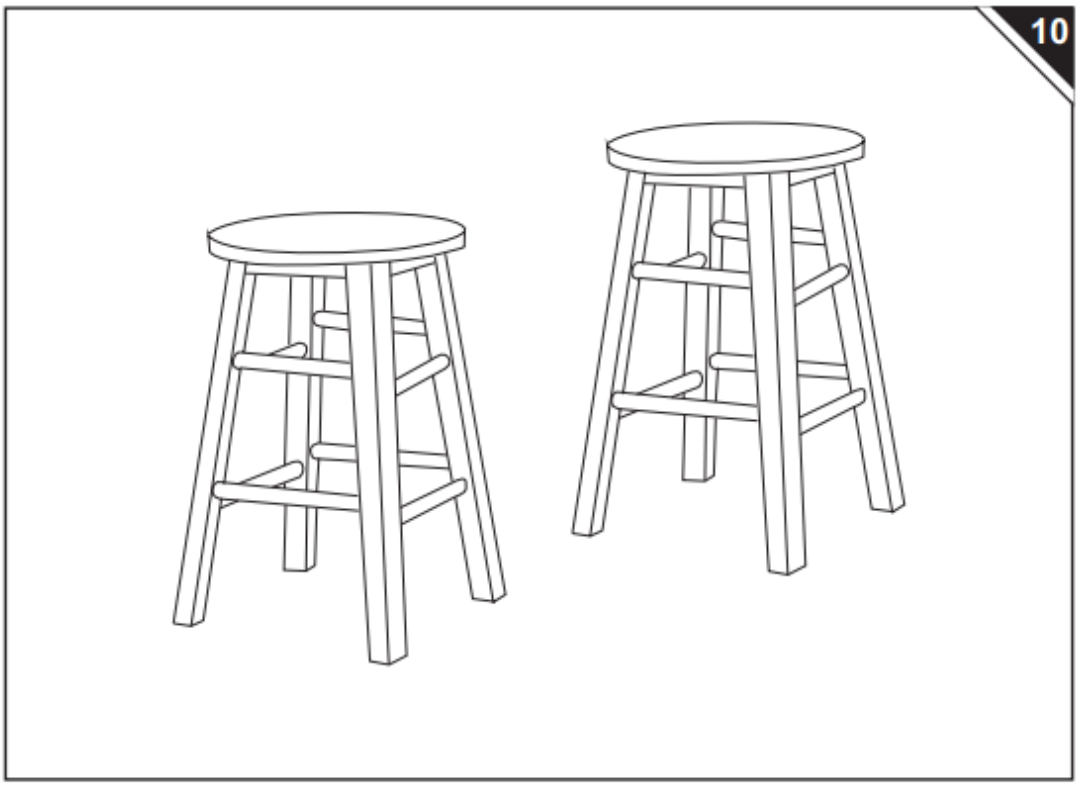
10

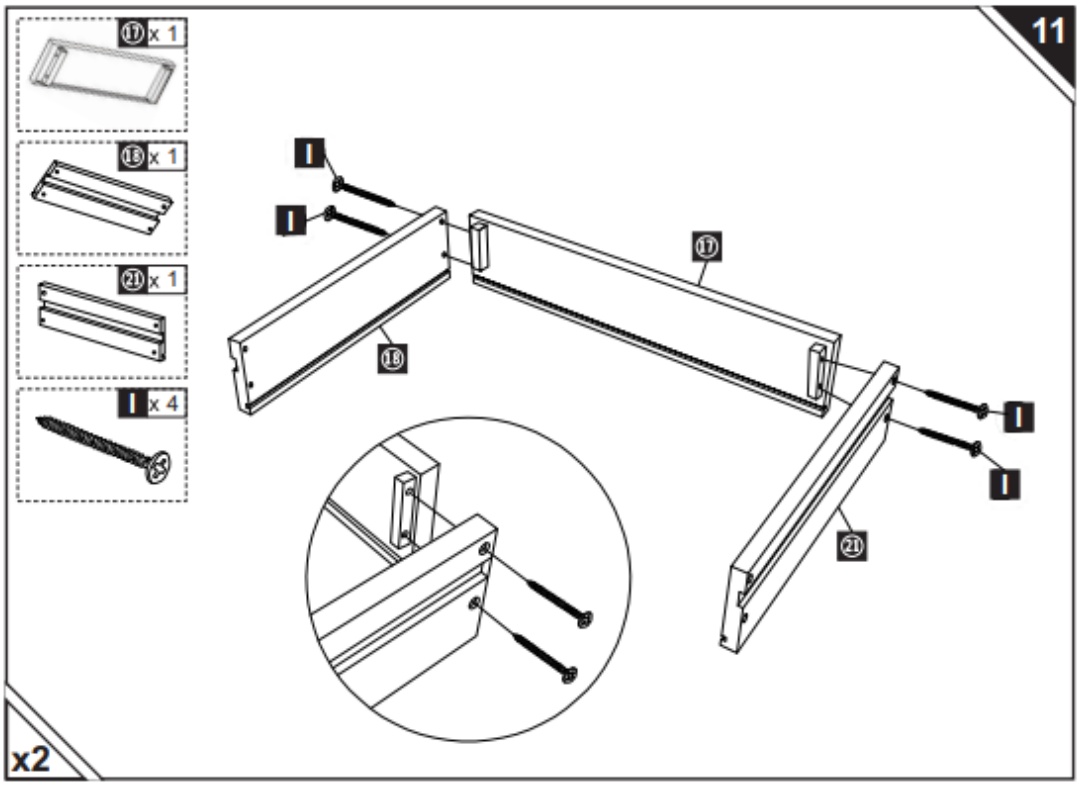
11
⑰ x 1
⑱ x 1
㉑ x 1
I x 4
I
I
⑰
⑱
I
I
㉑
x2

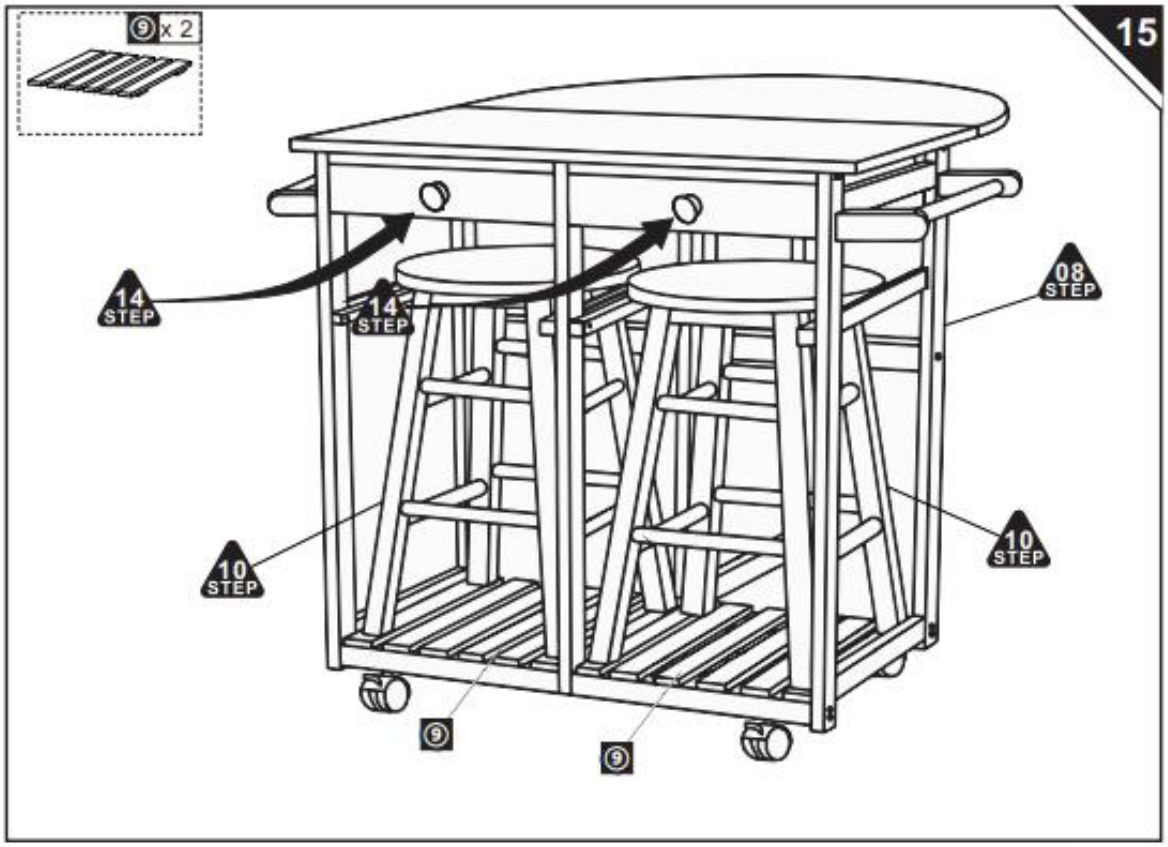
15
⑨ x 2
14 STEP
14 STEP
08 STEP
10 STEP
10 STEP
⑨
⑨

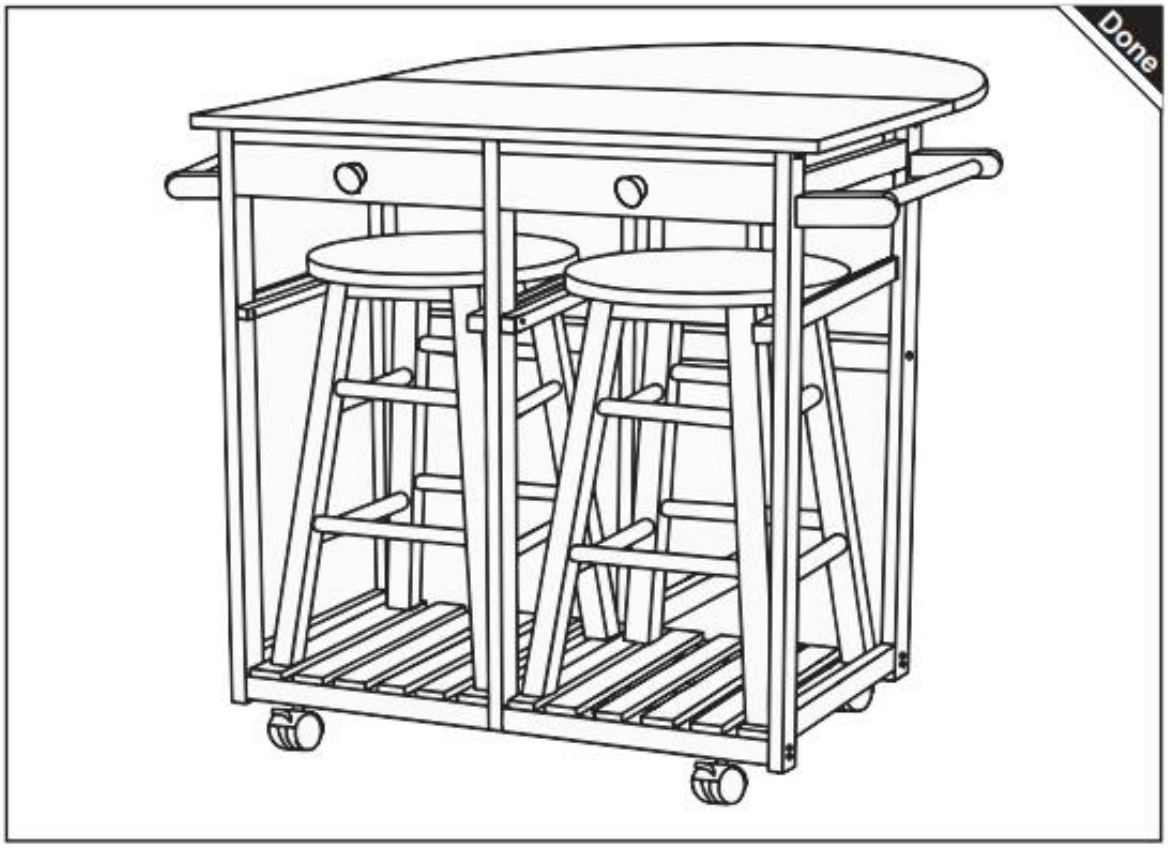
Done